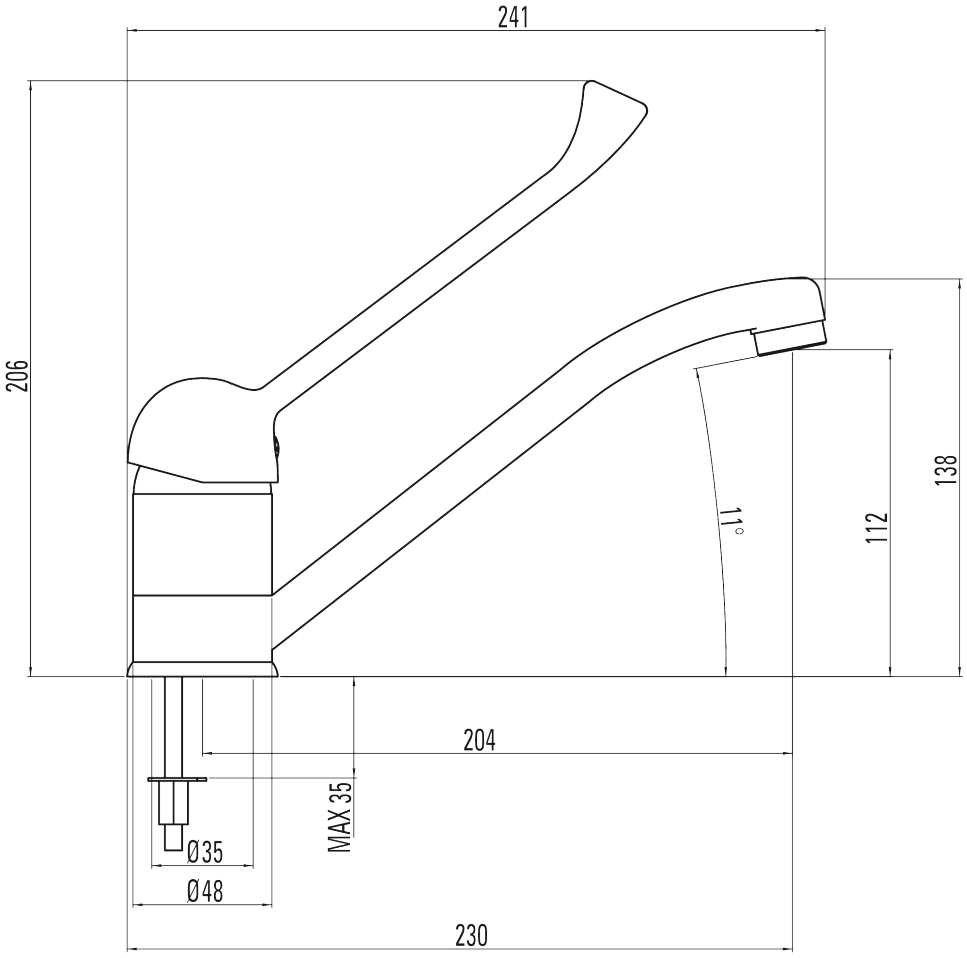Vital